RESEARCH ARTICLE Journal of Daylighting 7 (2020) 154-166 doi:10.15627/jd.2020.15

ISSN 2383-8701

Journal of Daylighting

Journal homepage: https://solarlits.com/jd

Effective Use of Daylight in Office Rooms

Vitalii Burmaka,[*,a] Mykola Tarasenko,[a] Kateryna Kozak,[a] Lukman Ahmed Omeiza,[b] Nataliia Sabat[c]

[a] Department of Electrical Engineering, Ternopil Ivan Puluj National Technical University, 56, Ruska Street, 46001 Ternopil, Ukraine

[b] Department of Electrical/Electronic Engineering, Federal Polytechnic Bida, 5, Doko Road, 912101 Bida, Niger State, Nigeria

[c] Department of Computer Systems and Networks, Ivano-Frankivsk National Technical University of Oil and Gas, 15 Karpatska Street, 76019 Ivano-Frankivsk, Ukraine

Article info

Article history:
Received 9 May 2020
Revised 9 July 2020
Accepted 18 July 2020
Published online 12 August 2020

Keywords:
Daylight factor
Daylight autonomy
Specific daylight autonomy
Office rooms daylighting

Abstract

The rational use of daylight can significantly reduce the cost of electricity for artificial lighting. This research aims at investigating the parameters of translucent structures of building envelope, and the value of daylight factor, for which maximum efficiency of daylight usage is achieved in office rooms. The study analyzes the dependence duration of daylight autonomy in office rooms, on the value of daylight factor for four European cities. The specific daylight autonomy (h/(year·m^2)) of office rooms were found. It was proved, that regardless the size of the rooms, the maximum specific daylight autonomy in Ternopil city (at illumination of 300 lx, which is prescribed by regulations), with lateral daylight, occurs when the daylight factor is in the range of 1.7% to 1.9%. Maxima – at 1.8%. At illumination of 500 lx, the maximum specific daylight autonomy will occur at a daylight factor range of 2.6% to 3.0%. Maxima – at 2.8%.

© 2020 The Author(s). Published by solarlits.com. This is an open access article under the CC BY license (https://creativecommons.org/licenses/by/4.0/).

1. Introduction

Presently, in solving the problem of office rooms lighting, attention is focused on the use of artificial light sources. According to the IEA's data, artificial light consumes about 2650 TWh·h electricity per year (≈19% of world electricity production), exceeding the total amount of electricity produced by all nuclear power plants in the world [1]. In Ukraine, artificial lighting accounts for about 16% of total electricity consumed in the country. These indicate that the lighting system is a significant consumer of electricity, especially in office rooms (up to 80%).

The use of daylight to illuminate office rooms is one of the most obvious ways to save energy. According to International Labour Organization (ILO), complete absence of daylight in workplace is hazardous. Man is biologically adapted to daylight. Its optimal use can significantly reduce the cost of electricity for artificial lighting. For this reason, it is necessary to choose the right size and thermal characteristics of translucent structures of building envelope (TSBE). Until recent advancement in daylight technology, TSBE was the weakest link in the building envelope (BE) of office rooms.

In a world currently concerned about global warming, carbon emission, sustainable design and capital costs for industrial construction, irrational design of buildings lighting system, can cause discomfort and enormous heat loss, which are no longer acceptable. Therefore, it's necessary to strive for the maximum use of daylight.

The economic benefits of daylight are often considered in terms of energy saving, without taking into account the effort of labour and productivity, which can be more significant than energy saving [2]. Investment in lighting modernization, heating and cooling systems can easily be done by increasing labour and productivity.

Such studies were carried out by S. Samoilov and A. Soloviov [3], V. Bartenbach [4], J. Koso [5], Yu. Tabunshchikov [6], E. Neuert [7], A. Korkina [8] and others, in respect to daylight modernization.

The research [8], conducted by A. Korkina, that analysis the design and size of TSBE effect on solar radiations relative penetration coefficient (SRRPC), was a huge breakthrough. The energy efficiency of combined lighting was taking into account; the energy balance of the premises was considered by T. G. Korzhneva in [9]. A study of the impact of various types, sizes and locations of TSBE on lighting of office rooms was carried out in [10] by H. Altan and J. Mohelnikova. The results of the study

*Corresponding author.
vitaliy.burmaka@gmail.com (V. Burmaka)
tarasenko_mykola@ukr.net (M. Tarasenko)
kozakateryna@gmail.com (K. Kozak)
lukahmed@yahoo.com (L. A. Omeiza)
natasabat04@ukr.net (N. Sabat)

2383-8701/© 2020 The Author(s). Published by solarlits.com. This is an open access article under the CC BY license (https://creativecommons.org/licenses/by/4.0/).

Nomenclature

DA	*Daylight autonomy, h/year*
DA_{300}	*Daylight autonomy with prescribed by regulations illumination in 300 lx, h/year*
DA_{con}	*Ratio between the illuminance determined only by daylight on a point and the minimum daylight illuminance required on the workplane required by the standards;*
DA_{max}	*Annual percentage of time during which a maximum illuminance level is trespassed and over which visual discomfort may occur*
DF	*Daylight factor, %*
$d_{RP,\ lRP}$	*Coordinates of the RP location in the room, m*
E	*Average monthly horizontal illumination, klx*
da_{TSBE}	*Specific daylight autonomy efficiency of the TSBE area using, h/(year·m²)*
h_{GL}	*Glazing height, m*
h_{TSBE}	*TSBE height, m*
$i_{C.TSBE}$	*TSBE coordination index, rel. un*
$I_{GL.R}$	*Composite room glazing index, %*
l	*TSBE opaque part width, m*
$l_{F.F}$	*Foam filling width, m*
l_{GL}	*Glazing width, m*
l_{PROF}	*Profile width, m*
l_{TSBE}	*TSBE width, m*
S_{GL}	*TSBE glazing area, m²*
S_{TSBE}	*Area of TSBE, m²*
S_{WS}	*Working surface area, m²*
WFR	*Window to floor ratio, %*
WWR	*Window to wall ratio, %*
ε_{GL}	*Glazing solar radiations relative penetration coefficient*
BE	*building envelope*
CRGI	*Composite room glazing index*
EDR	*Energy daylight rate*
LF	*Light factor*
RP	*Reference point*
SRRPC	*Solar radiations relative penetration coefficient*
TSBE	*Translucent structures of building envelope*
WS	*Working surface*

indicate that not only the size and type of TSBE are important, but also their location in the BE.

Dynamic daylight simulation is very useful instrument in daylighting design process. It allows thorough analyzing of indoor daylight availability level and defining if they are adequate to perform a particular visual task. Their results can be used to design shading devices or lighting control systems and to compare different technical solutions. The use of simulation is widely spread in the common design practice, since some regulations and green building rating systems suggest their use. Paper [11] presents dynamic daylight simulation result related to an open-plan office. The study shows the functionality of this software in dynamic daylight simulation field and proposes a methodology on how it should be used. Study [12] demonstrated that evaluating energy costs with different software can vary the results up to 15%. Differences in results depend on the definition of indoor daylight availability, it also depend on the control systems' modeling that neglect important factors, such as the specific characteri stics of photosensors, luminaires or drivers [13-16]. Even though these calculation techniques are very useful in the entire design process, experimentations are necessary to improve software performance in order to make calculation models more similar to realistic conditions.

The study [17] showed that the implementation of the new requirements of the EN-17037 standard is important, since it addresses daylighting concerns. The authors focus on the need to use software modeling, which allows one to calculate the criteria's presented in this research. Also, in this article, we compared the required standards with practical tasks, which arise during the construction process. I.e. In practice, there were fears that only rooms located in a very open environment (upper floors) can be well evaluated.

Due to the fact that the theoretical combination of the characteristics of natural and artificial lighting is problematic (this is because various software packages are required to perform detailed calculations) [18,19], the authors proposed a new parameter, the Energy Daylight Rate (EDR), which allows optimizing the design of the BE at the early stage of room designing.

Studies [20-22] examined ways to increase the energy efficiency of artificial lighting systems in administrative buildings. The study [20] showed the need to optimize artificial lighting systems for office buildings due to their significant consumption of artificial lighting. In [21], the feasibility of introducing an artificial lighting control system was considered. Arguments are also given in [22], regarding the appropriateness of using combined lighting systems. In general, these studies indicate the need for the introduction of daylighting systems in administrative premises to ensure maximum energy efficiency of artificial lighting systems of the building.

Due to the fact that the intensity of solar radiation input depends on climatic conditions, a methodology was developed that focused on the use of climatic data for the construction of climatology in the calculations [23] by O. V. Serheichuk. The methodology determines the effect of shading devices, used on the flow of solar radiation through TSBE.

A study [24] reviews the comprehensive calculation method for lighting energy requirement in non-residential buildings, introduced by the European Standard EN 15193: 2007 and investigates its feasibility in China. The location of office rooms influences the intensity and duration of daylight. In EN 15193 calculation method, the daylight supply factor, which represents the effect of daylighting on artificial lighting usage, is the only factor related to location and is calculated according to the latitude, however the current method (EN15193: 2007) limits the latitude range from 38° to 60° north in Europe, for which the relationship between daylight supply factor and latitude is approximately linear. The study [24] shows that a quadratic relationship needs to be used for a wider range of latitudes. The coefficients of the proposed quadratic relationship are determined for classified daylight penetration and maintained illuminance level. Various control types are also considered.

Papers [25,26] proposes a concept for a new daylighting analysis framework for residential architecture. It consists of two sub-metrics that capture diurnal and seasonal daylight availability, as well as the average duration of access to direct light. It is shown that through the use of the proposed framework, significant and

2383-8701/© 2020 The Author(s). Published by solarlits.com. This is an open access article under the CC BY license (https://creativecommons.org/licenses/by/4.0/).

actionable qualitative differences between apartment units can be identified, that would otherwise remain unnoticed during the design and evaluation process. The framework also provides several levels of details, which ranges from a simple score to spatial plots that allow modelers to understand and optimize the daylighting characteristics of a room, apartment building or neighborhood.

The annual energy consumption of an office building depends on the various types of TSBE in the climatic zone, with hot summer and cold winter presented [27]. The authors developed a calculation model for the office rooms, and carried out a series of simulations on the energy consumption of the building when changing TSBE parameters. It was found that when using both single glazing and a two-pane double-glazed window made of ordinary glass and those painted green, the most energy-efficient rooms are achieved with a window to wall ratio (WWR) close to 20%.

In the study [28], the relationship between the attributes of the building structure and the existing parameters of daylighting measuring was studied based on the new methodology. This methodology includes a statistical study. It helps analyze a large amount of input data and the impact of a large number of design changes. In particular, this statistical methodology can be used to analyze which parameters are important and which are not, as well as the type of dependencies on each other. Using these methods, statistical models can be created to predict the values of the daylighting metric for various types of buildings and design decisions. This article describes the principle of operation of this methodology and analyzes the structural features of the building, which have the greatest impact on the efficiency of daylighting.

The review [29] reveals that energy intensity of around 10 kWh/(m^2·yr) is a realistic target for office electric lighting, for future low energy office buildings. This target would yield a significant reduction in energy intensity of at least 50%, compared to the actual average electricity use for lighting (21 kWh/(m^2·yr) in Sweden). Strategies for reducing energy use for artificial lighting are presented and discussed, which includes: improvements in lamp, ballast and luminaire technology, use of task/ambient lighting, improvement in maintenance and utilization factor, reduction of maintained illuminance levels and total switch-on time, use of manual dimming and switch-off occupancy sensors. Strategies based on daylight harvesting are also presented and the relevant design aspects such as effects of window characteristics, properties of shading devices, reflectance of inner surfaces, ceiling and partition height are discussed. The study indicates the need to optimize the parameters of artificial lighting to reduce the load on the energy system that is constantly growing.

Paper [30] presents a literature review about energy-efficient retrofit of electric lighting and daylighting systems in buildings. The review, which covers around 160 research articles, addresses the following themes: a) retrofitting electric lighting in buildings, b) electric lighting energy use and saving potential and c) lighting retrofit strategies. The retrofit strategies covered in the review are: replacement of lamp, ballast or luminaire; use of task-ambient lighting design; improvement in maintenance; reduction of maintained illuminance levels; improvement in spectral quality of light sources; improvement in occupant behavior; use of control systems; and use of daylighting systems. The review indicates that existing general knowledge about lighting retrofit is currently very limited and that there is a significant lack of information concerning the actual energy performance of lighting systems installed in the existing building stock.

Despite a significant amount of research in the field of daylighting, issues of TSBE design, determining the daylight factor (DF) value, at which the maximum use of daylight will be ensured, is not sufficiently disclosed. This indicates the relevance of conducting this research, aimed at developing recommendations for improving the energy efficiency of office rooms, not only by increasing the thermal resistance of BE, but also by making more efficient use of daylight for their lighting. That is why the purpose of this study was to determine the parameters of TSBE and to establish the DF value at which the maximum efficiency of daylight usage in office rooms of various sizes is ensured.

2. Methodology

Artificial lighting is much lower than daylight, even in the overcast sky conditions. I.e., the level of horizontal room's illumination without daylight is 100-500 lx and 1000 to 2000 lx or more with daylight. On a clear sunny day under the open sky condition, this figure may rise up to 100,000 lx.

The effectiveness of daylight usage is determined by rational design solutions, when introducing daylight in an office rooms, the intensity and spectral composition of sunlight must be taken into consideration. The first step in solving this problem is to determine the relationship between daylight autonomy (DA) and DF value, at a reference point (RP) on a working surface (WS) for the office room (Fig. 1).

Calculations were carried out for room parameters, which are in confirmatory with current requirements of regulatory documents [32-37]. According to their data, the room height, the thickness of its walls and the reflection coefficients of the internal surfaces of the building envelope were selected and presented in (Table 1).

2.1. Daylight autonomy

The concept of DA was introduced for the first time in CIE Daylight Technical Report [38]. It was proposed again in 2001 by

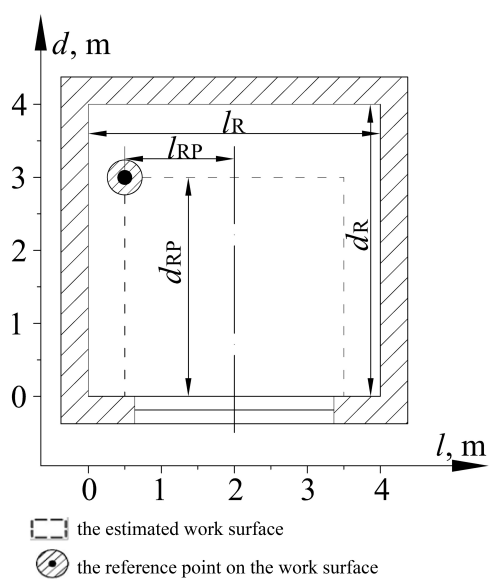

Fig. 1. Layout of a room with dimensions 4×4 m and TSBE area 6 m^2 [31].

2383-8701/© 2020 The Author(s). Published by solarlits.com. This is an open access article under the CC BY license (https://creativecommons.org/licenses/by/4.0/).

Table 1. The estimated parameters of the rooms.

Parameter	Height, m	Thickness of the walls, m	Coefficients of ceiling/wall/floor reflection, rel. units
Value	3.0	0.38	0.7/0.5/0.2

Table 2. The monthly working hours number for each month, h/month.

Value	Month											
	I	II	III	IV	V	VI	VII	VIII	IX	X	XI	XII
τ_W	207	180	198	189	207	189	198	207	180	207	198	189

Reinhart and Walkenhorst, as the annual percentage of the occupied time of a space during which the minimum illuminance prescribed by regulation is achieved [39]. In 2006, Rogers extended the DA and introduced the DA_{con} [40]. It is calculated as the ratio between the illuminance determined, only by daylight on an RP and the minimum illuminance required, on WS standard. For example, if an illuminance equal 400 lx is registered and the minimum illuminance on WS is equal 500 lx, DA_{con} will be 0.8 (400/500).

The DA_{max} was introduced by Rogers himself in 2006, to consider discomfort risks depending on excessive light levels [40]. The DA_{max} can be defined as the annual percentage of time during which a maximum illuminance level is trespassed, which may lead to visual discomfort. This limit is set at 10 times the minimum illuminance on WS. I.e., if the law establishes 150 lx on WS, this limit will be equal to 1500 lx.

Let us determine the dependence of DA in office rooms on *DF* value at RP for Ternopil city, Ukraine. The problem was solved using the software Relux (v. 2020.1.3.0) [41]. The reliability of the results of this software package was tested in [42-44].

Since the standard CIE overcast sky conditions were used in the DA calculation in the Relux program, and the calculation was made only for the diffused light, we assume that the TSBE in this study oriented to the north. In this study minimum daylight autonomy values were used.

For calculations, we adapted 9 hours working day (from 9:00 am to 6:00 pm). In accordance with [32,45], minimum illumination prescribed by regulations for office rooms is 300 lx (DA_{300}). By setting the total duration of work for a month, it is possible to determine the dependence of DA_{300} on *DF* value. The data of monthly working hours, which were used for calculations in the Relux, are given in Table 2.

2.2. Determination of the TSBE size and area, that is necessary to ensure the appropriate DF value at the RP

Due to the fact that *DF* value does not allow us to determine the size of the room or the area of TSBE, it is advisable to replace it with the composite room glazing index (CRGI) [31]. This was given in Eq. (1).

$$I_{GL.R} = 1.1 \cdot (-2.148 \cdot DF^2 + 27.087 \cdot DF + 0.487), \%, \quad (1)$$

where 1.1 is the the safety factor [31];

However, when determining the CRGI [31], the influence of the SRRPC (ε_{GL}) on the *DF* value was not taken into account. In the study [31], its value was taken as $\varepsilon_{GL} = 0.8$. According to [32], the *DF* value is directly proportional to the light transmittance. Therefore, to take it into account, Eq. (1) must be multiplied by $0.8/\varepsilon_{GL}$. Then Eq. (1) will take the form Eq. (2).

$$I_{GL.R} = 1.1 \cdot 0.8/\varepsilon_{GL}(-2.148 \cdot DF^2 + 27.087 \cdot DF + 0.487), \% \quad (2)$$

Based on these data, as well as with the dependence of CRGI on *DF* value in Eq. (2), it is possible to determine the required glazing area of TSBE by the Eq. (3) [31].

$$I_{GL.R} = S_{GL}/S_{WS} \cdot \sqrt[l_{RP}]{2 \cdot l_{RP}/d_{RP}} \cdot 100, \%, \quad (3)$$

where S_{GL} is the TSBE glazing area, m^2 [46], S_{WS} is the working surface area ($S_{WS} = 2 \cdot l_{RP} \cdot d_{RP}$), m^2, and d_{RP} and l_{RP} are the coordinates of the RP location in the room (Fig. 1), m.

According to the regulatory document [32], which is harmonized with European standard [45], lateral daylighting is prescribed by regulations to the minimum *DF* value. Therefore, RP determination is selected at the farthest point on the WS, which is located at a distance of 1 m from the wall opposite TSBE and 0.5 m from the side BE.

A metal-plastic window with a Veka Softline 82 profile and a double-glazed window 4Solar-16Ar-4-12Ar-4 with thermal resistance 1 (m^2·°C)/Wh and SRRPC 0.68 rel. un was used as the TSBE. (Fig. 2).

Based on the obtained CRGI value, it is possible to determine the minimum TSBE glazing area, which provide prescribed regulation illuminance at the RP of the WS by using the Eq. (4) [31].

$$S_{GL} = I_{GL.R} \cdot S_{WS} \cdot \sqrt[l_{RP}]{d_{RP}/(2 \cdot l_{RP})}/100, m^2. \quad (4)$$

Next, according to the algorithm [31], it is necessary to set the TSBE coordination index ($i_{C.TSBE}$), the proportions of TSBE affect the value of *DF* in RP [48]. TSBE glazing dimensions are determined using the Eq. (5) and Eq. (6)

$$h_{GL} = \sqrt{S_{GL}/i_{C.TSBE}}, m^2, \quad (5)$$

where $i_{C.TSBE}$ is the TSBE coordination index;

$$l_{GL} = \sqrt{S_{GL} \cdot i_{C.TSBE}}, m. \quad (6)$$

To determine TSBE area, it is necessary we obtained the data on its width of the profile and foam filling. For this reason, it is necessary to determine the height and width of TSBE. Based on the size of the glazing and the thickness of the profile, they can be determined by the Eq. (7) and Eq. (8)

$$h_{TSBE} = h_{GL} + 2 \cdot l_{PROF}, m, \quad (7)$$

where l_{PROF} – profile width, m [47];

$$l_{TSBE} = l_{GL} + 2 \cdot l_{PROF}, m. \quad (8)$$

The foam filling width is determined from [46], by the Eq. (9)

2383-8701/© 2020 The Author(s). Published by solarlits.com. This is an open access article under the CC BY license (https://creativecommons.org/licenses/by/4.0/).

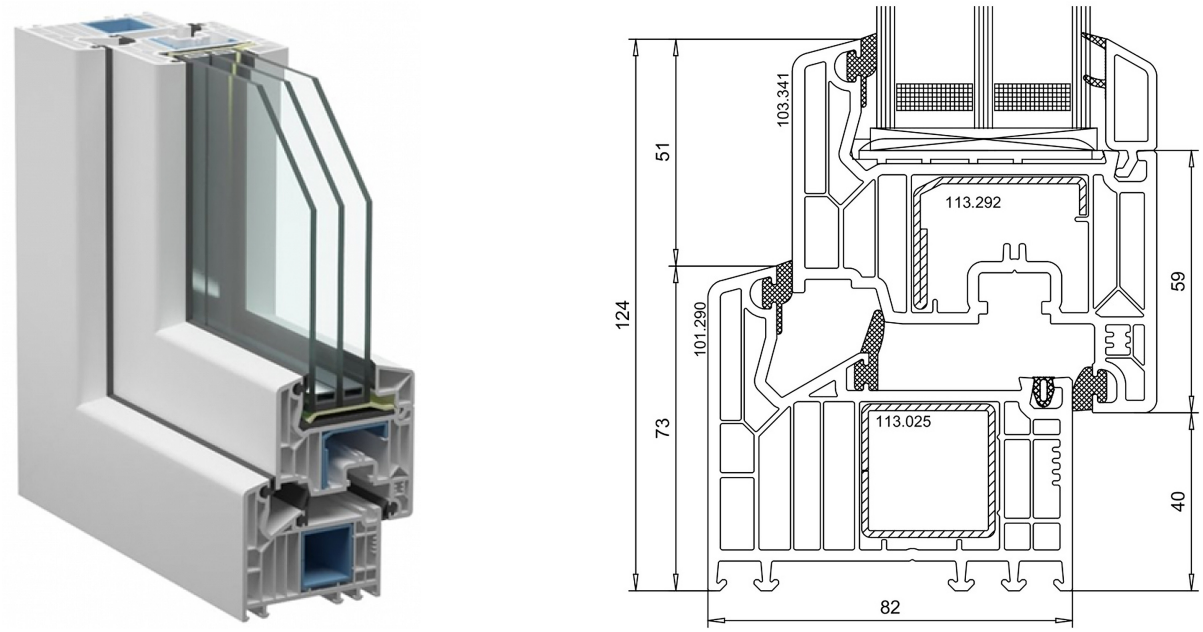

(a) (b)

Fig. 2. (**a**) The appearance and (**b**) dimensions of the profile Veka Softline 82 with double-glazed window 4Solar-16Ar-4-12Ar-4i [47].

$$\begin{cases} \text{if } l_{\text{TSBE}} > h_{\text{TSBE,}} \text{ then } l_{\text{F.F}} = (125 \cdot l_{\text{TSBE}}^2 - 123 \cdot l_{\text{TSBE}} + 1050) \cdot 10^{-5}, \text{m}, \\ \text{if } l_{\text{TSBE}} < h_{\text{TSBE,}} \text{ then } l_{\text{F.F}} = (125 \cdot h_{\text{TSBE}}^2 - 123 \cdot h_{\text{TSBE}} + 1050) \cdot 10^{-5}, \text{m} \\ \text{if } l_{\text{TSBE}} \text{ or } h_{\text{TSBE}} \geq 4.5 \text{ m, then } l_{\text{F.F}} = 0.03, \text{m.} \end{cases} \quad (9)$$

The TSBE area is determined by the Eq. (10) [31].

$$S_{\text{TSBE}} = S_{\text{GL}} + 2 \cdot l \cdot (l_{\text{TSBE}} + h_{\text{TSBE}} + 2 \cdot l), m^2; \quad (10)$$

where l – TSBE opaque part width [46], m;

The TSBE opaque part width is determined by the Eq. (11) [46].

$$l = l_{\text{PROF}} + l_{\text{F.F}}, m; \quad (11)$$

The calculations were carried out according to the algorithm shown in the flow chart (Fig. 3).

3. Results

3.1. Testing the feasibility of using WFR, WWR and CRGI to evaluate daylighting

In Eastern European countries, such as Ukraine, Belarus, Russia etc., to compare the energy efficiency of TSBE, the light factor (LF) is used, which is named window-to-floor ratio (WFR) in other countries and defined as the ratio of TSBE area to the floor area of the room (S_R), which is given in Table 3.

As can be seen from the Table 4, the WFR value, at which *DF* value of 1.9% and 2% are ensured for the rooms examined, varies from 14.5% to 47.0% in the first case and from 15% to 48.9% in the second. That depends on the size of the room, the WFR value may differ by 3.24-3.26 times. From which we can conclude the inadmissibility of using WFR to assess the daylighting of rooms. In studies [3,16,27,49-57], WWR was used to summarize the results, that is, the ratio of the TSBE area (S_{TSBE}) to the internal area of the TSBE in the BE in which it is installed. The height of the investigated room is 3 m.

As can be seen from the Table 4, depending on the size of the room, the WWR value, at which *DF* value of 1.9% and 2.0% are achieved, varies from 9.6% to 78.3% in the first case and from 10.0 to 81.5% in the second. That is, for a room with dimensions (width × depth × height): 4×2×3 m, the WWR value will be 8.15 times less than room with dimensions 4 × 5 × 3 m. This indicates the inadmissibility of using this indicator in the study of energy efficiency using natural lighting. As we can see, the use of both WFR and WWR to evaluate the efficiency of using natural light is unacceptable.

In order to determine the error, it is observed when using CRGI, we determine the DF value at the RP, at which will be provided in the rooms under consideration with the TSBE area indicated in Table 5.

The calculations were carried out in the Relux program according to the global illumination algorithm (Radiosity). The error did not exceed 7% [58]. According to [59], the calculation error in the Relux program does not exceed ±10%. This is quite enough for various kinds of lighting calculations.

The methodology for calculating *DF* at RP is given [31]. The pollution and absorption coefficients of TSBE are taken to equal 0.9. The results of *DF* value at RP calculation, which will be achieved when establishing the TSBE area, is shown in Table 2, and are given in Table 5. Analysis of the Table 5 data showed that for *DF* values of 1.9% and 2.0%, in rooms with dimensions of 4×5; 5×5, and 6×5, the TSBE area equal 9.78 m^2, 10.72 m^2 and 12.19 m^2, respectively. Since the height of the premises is assumed to be 3 m, and according to expression (5), for these cases it will be 3.13 m, 3.27 m and 3.49 m, their height exceeds the height of the room. So the calculation of the *DF* value deviation from its set value, we use *DF* value of 0.8% ($I_{\text{GL.R}}$ = 20.66) and 1% ($I_{\text{GL.R}}$ = 26.89).

As can be seen from the Table 5, for rooms of different sizes, with the same value of CRGI, the deviations of the *DF* value do not exceed 26.1% ((0,8-1,009)/0,8·100), except when the width of the room is twice the depth ($l_R \geq 2 \cdot d_R$). Such a large error is explained by the fact that to compensate for the non-synchronization of *DF* changes from TSBE proportions for rooms

2383-8701/© 2020 The Author(s). Published by solarlits.com. This is an open access article under the CC BY license (https://creativecommons.org/licenses/by/4.0/).

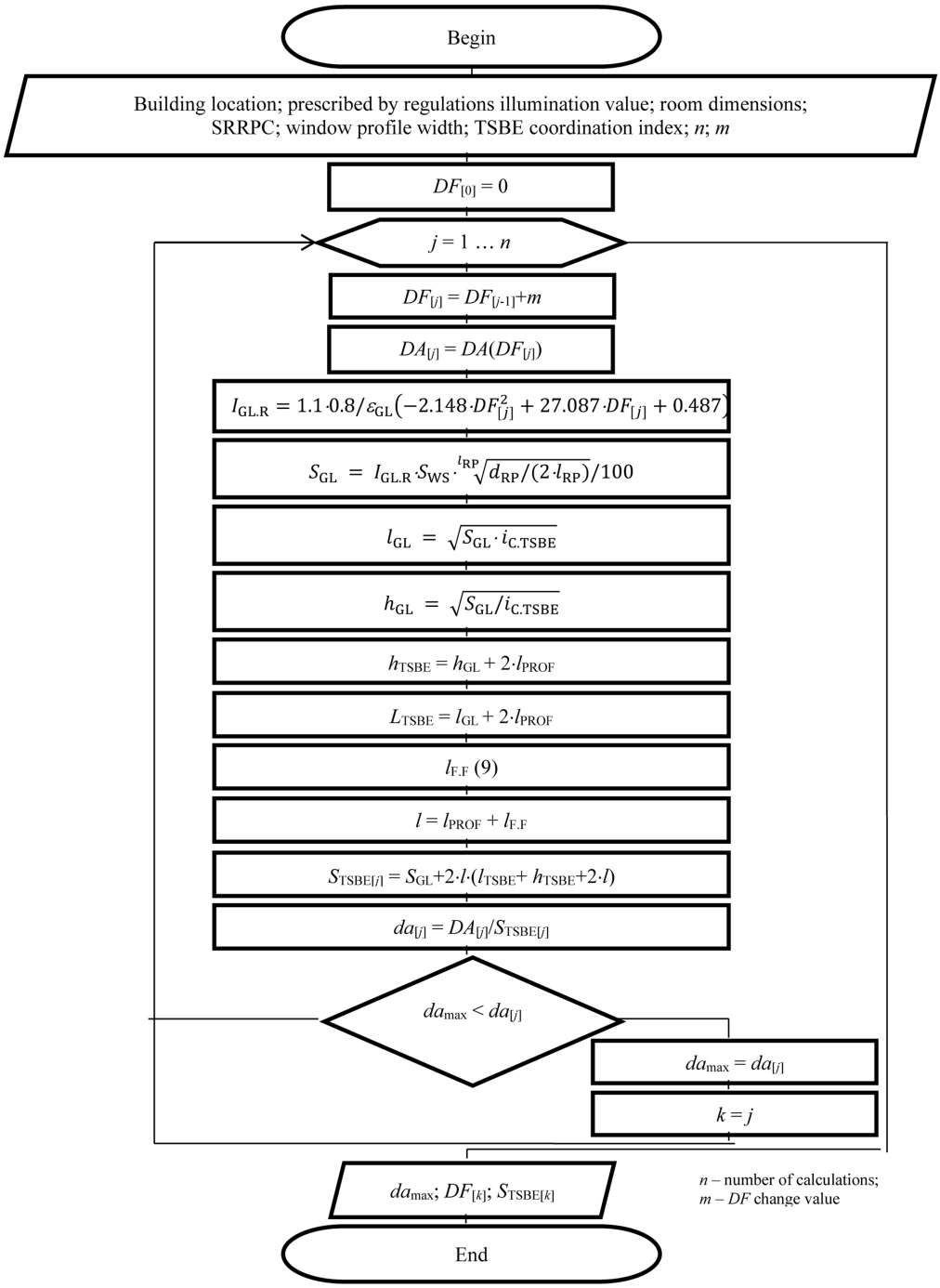

Fig. 3. The flow chart of the DF value calculation, at which the maximum DA value is achieved.

of any sizes, the safety factor is used, which leads to an overestimation of *DF* values over the prescribed by regulations [31].

While WFR and WWR, depending on the size of the room, can differ several times, the use of the CRGI allows you to develop common criteria for assessing the effectiveness of daylighting. Therefore, to solve this problem, we propose the use of a CRGI, since it takes into account the size of the room.

To establish the optimal parameters of the TSBE, in future studies it is necessary to consider the effect of TSBE on the energy balance of the room, taking into account not only energy savings through the use of daylight but also the increase in heat loss due to heat transfer and heat from solar radiation during the heating period, as well as heat transfer during the cooling period that is partially reviewed [60].

3.2. Office rooms daylight autonomy

Since the prescribed regulations illuminance of office rooms should be 300 lx, knowing the monthly duration of work, we can determine the dependence of DA_{300} on DF value. In Fig. 4, graphs are shown of DA_{300} dependence on *DF* value during the year for

2383-8701/© 2020 The Author(s). Published by solarlits.com. This is an open access article under the CC BY license (https://creativecommons.org/licenses/by/4.0/).

Table 3. WFR value, at which the required DF value will be provided for rooms of various sizes, %.

DF, %	Room dimensions, m								
	4×2	4×3	4×4	4×5	5×3	5×4	5×5	6×3	6×4
1.9	*14.5*	26.7	37.4	*47.0*	25.9	34.2	41.2	26.0	33.2
2.0	*15.0*	27.7	38.8	*48.9*	26.9	35.6	42.9	27.0	34.6

Table 4. WWR value, at which the required DF value will be provided for rooms of various sizes, %.

DF, %	Room dimensions, m								
	4×2	4×3	4×4	4×5	5×3	5×4	5×5	6×3	6×4
1.9	9.6	26.7	49.8	78.3	25.9	45.6	68.7	26.0	44.3
2.0	10.0	27.7	51.8	81.5	26.9	47.4	71.5	27.0	46.1

Table 5. The results of the DF value calculation for the investigated room of various sizes, in the deposits from the CRGI, %.

CRGI (DF),%	Room dimensions, m									
	4×2	4×3	4×4	4×5	5×3	5×4	5×5	6×3	6×4	6×5
20.66 (0.8)	*0.256*	0.931	1.009	0.922	0.922	0.918	0.914	*0.527*	0.957	0.803
26.89 (1.0)	*0.467*	1.113	1.173	1.084	1.052	1.139	1.100	*0.906*	1.158	1.067

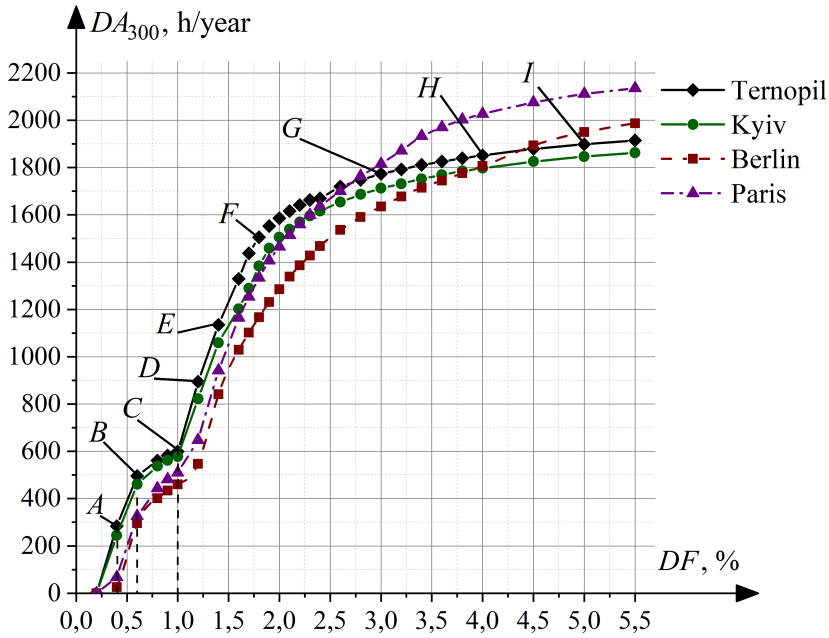

Fig. 4. Dependence of the room's DA_{300} on the *DF* value, with a prescribed by regulations illumination value of 300 lx for four cities.

the cities of Ternopil (49° 34' N. 25° 36' east), Kyiv (50° 27' N. 30° 31' E), Paris (48° 51' N. 2° 21 'E) and Berlin (52° 31' N, 13° 24' E).

As can be seen, from the Fig. 4, for Ternopil city, when *DF* value changes from 0.4% (Fig. 4, p. *A*) to 0.6% (Fig. 4 p. *B*) and from 1.2% (Fig. 4, p. *D*) to 1.4% (Fig. 4, p. *E*) there is an abrupt change in DA_{300}. That is, in these areas, an increase in *DF* by 0.2% leads to a significant increase in energy saving for artificial lighting. In general, with an increase in *DF* value by 1%, we obtain the following difference in DA_{300}: when changing from 0% to 1% (Fig. 4, p. *C*) – 599.00 hours; from 1% (Fig. 4 p. *C*) to 2% (Fig. 4, p. *F*) – 986.58 hours; from 2% (Fig. 4, p. *F*) to 3% (Fig. 4, p. *G*) – 187.92 hours; from 3% (Fig. 4, p. *G*) to 4% (Fig. 4, p. *H*) – 77.52 hours; from 4% (Fig. 4, p. *H*) to 5% (Fig. 4, p. *I*) – 46.98 hours. Whereas the difference between 0.4-0.6% is 211.41 hours and between 1.2-1.4% – 239.60 hours. Based on the obtained results, it can be argued that when you change certain *DF* values (Fig. 4, p. *A* and p. *D*) by 0.2% (Fig. 4, p. *B* and p. *E*), you can achieve the same effect as when the other (Fig. 4, p. *F* and p. *G*) change by 1% (Fig. 4, p. *F* and p. *H*).

If we compare the graphs of the dependence of DA_{300} and DA_{500} on *DF* value (Fig. 4 and Fig. 5), then we will see the difference in values, but similar in form of dependence. It should also be noted that despite the fact that according to the value of prescribed by regulations illumination for DA_{500}, it is expected to be 1.67 times greater than DA_{300}, the values of DA will differ, when *DF* is 1% (Fig. 4, p. *C*) and Fig. 5, p. *B*) – 17.25%, 2% (Fig. 4, p. *F* and Fig. 5, p. *E*) – 43.56%, 3% (Fig. 5, p. *G* and Fig. 5, p. *F*) – 15.10%, 4%

2383-8701/© 2020 The Author(s). Published by solarlits.com. This is an open access article under the CC BY license (https://creativecommons.org/licenses/by/4.0/).

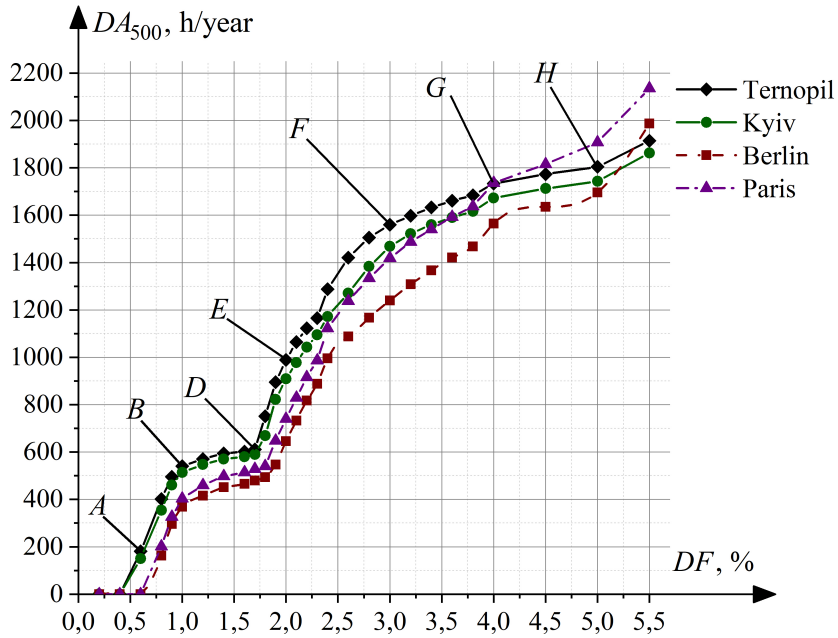

Fig. 5. Dependence of the room's DA_{500} on the DF value, with a prescribed by regulations illumination value of 500 lx for four cities.

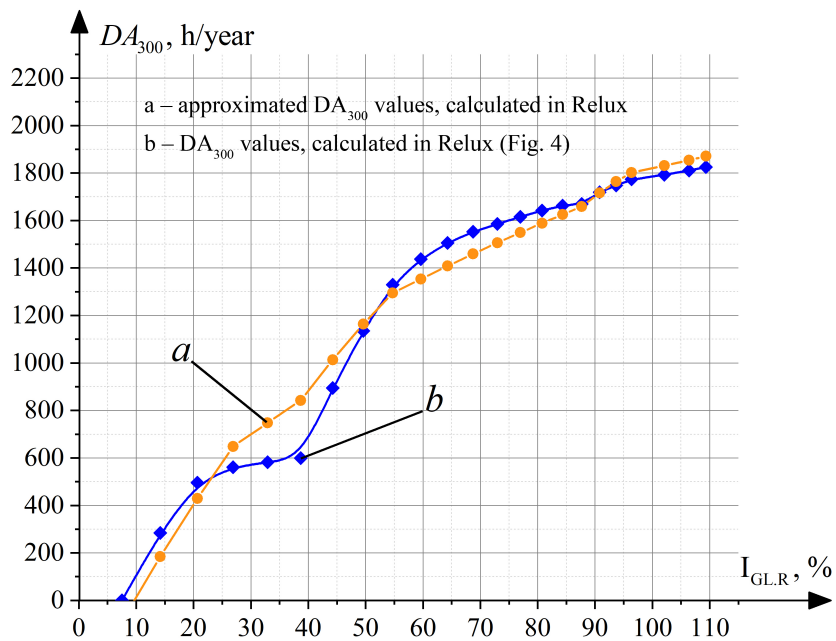

Fig. 6. Dependences of the DA_{300} on the CRGI value for Ternopil city, Ukraine.

(Fig. 4, p. *H* and Fig. 5, p. *G*) – 9.01%, 5% (Fig. 4, p. *I* and Fig. 5, p. *H*) – 6.56%.

To establish the analytical dependence of DA_{300} on the size of the room and the area of TSBE, we construct the graphic dependences of DA_{300} on CRGI (Fig. 6), for this we use the data obtained in determining the dependence of DA_{300} on DF value in RP (Fig. 4). Data are given for Ternopil city, Ukraine.

As a result of approximating the obtained point data (Fig. 6(*a*)) by the least squares method, Eq. (12), was received, this helped determine the value of DA_{300} for arbitrary values of CRGI for Ternopil city. The size of room and TSBE area, with a standard deviation of 82.6 and determination coefficient of 0.979 is shown in (Fig. 6(*b*)). Approximation was carried out by the method of least squares, using Advanced Grapher (v. 2.2).

$$DA_{300} = -0.227 \cdot I_{\mathrm{GL.R}}^2 + 45.854 \cdot I_{\mathrm{GL.R}} - 420.953, h/year. \quad (12)$$

For the Kyiv city, the values of DA_{300} with a standard deviation of 71.22 and determination coefficient of 0.983 is determined by Eq. (13)

$$DA_{300} = -0.203 \cdot I_{\mathrm{GL.R}}^2 + 42.680 \cdot I_{\mathrm{GL.R}} - 401.236, h/year. \quad (13)$$

For the Berlin city, the values of DA_{300} with a standard deviation of 67.66 and determination coefficient of 0.987 is determined by Eq. (14)

$$DA_{300} = -0.115 \cdot I_{\mathrm{GL.R}}^2 + 34.564 \cdot I_{\mathrm{GL.R}} - 414.578, h/year. \quad (14)$$

For the Paris city, the values of DA_{300} with a standard deviation of 76.73 and determination coefficient of 0.987 is determined by Eq. (15)

2383-8701/© 2020 The Author(s). Published by solarlits.com. This is an open access article under the CC BY license (https://creativecommons.org/licenses/by/4.0/).

Table 6. TSBE area, at which the required *DF* value is provided, for rooms of various sizes, for the Ternopil city, m^2.

DF, %	Room dimensions, m									
	4×2	4×3	4×4	4×5	5×3	5×4	5×5	6×3	6×4	6×5
0.6	0.51	1.30	2.35	3.63	1.56	2.67	3.96	1.86	3.10	4.48
0.8	0.62	1.63	2.98	4.62	1.97	3.40	5.05	2.35	3.94	5.73
1.0	0.73	1.95	3.58	5.58	2.35	4.09	6.10	2.82	4.75	6.92
1.2	0.84	2.25	4.15	6.49	2.72	4.75	7.11	3.27	5.52	8.07
1.6	1.03	2.81	5.23	8.21	3.41	5.98	8.99	4.11	6.97	10.22
1.7	1.07	2.94	5.48	8.62	3.57	6.28	9.44	4.30	7.31	10.73
1.8	1.11	3.07	5.73	9.01	3.73	6.56	9.88	4.50	7.65	11.22
1.9	1.16	3.20	5.98	9.40	3.88	6.84	10.30	4.68	7.98	11.71
2.0	1.20	3.32	6.21	9.78	4.03	7.11	10.72	4.87	8.30	12.19
2.2	1.28	3.56	6.67	10.51	4.33	7.64	11.52	5.22	8.91	13.10
3.0	1.56	4.39	8.27	13.08	5.35	9.49	14.35	6.47	11.08	16.33
4.0	1.81	5.17	9.79	15.51	6.31	11.23	17.02	7.64	13.13	19.38

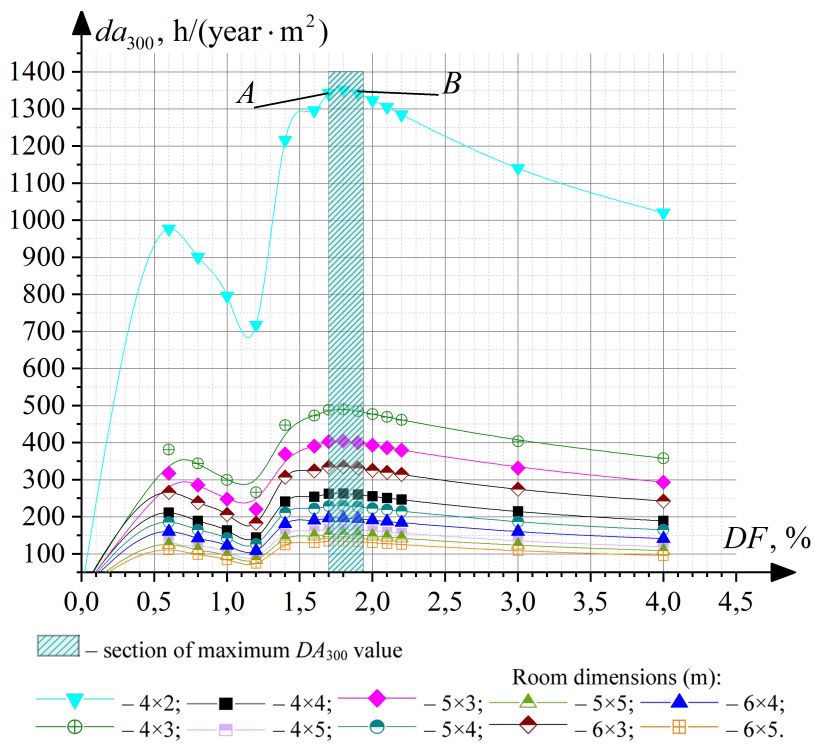

Fig. 7. Dependence of the specific DA_{300} on the *DF* value, for rooms of various sizes, with a prescribed by regulations illumination value of 300 lx, located in the Ternopil city.

$$DA_{300} = -0.146 \cdot I_{\mathrm{GL.R}}^2 + 40.248 \cdot I_{\mathrm{GL.R}} - 480.275, h/year. \quad (15)$$

3.3. Specific daylight efficiency

Let's consider an example on how to determine the minimum parameters of TSBE, at which we can get energy savings for artificial lighting. Study is carried out for the room with dimensions (width×depth×height): 6×4×3 m. From Eq. (2), CRGI values were calculated, which corresponds to the required *DF* value.

The selected double-glazed window (see Fig. 2), according to the manufacturer, has the SRRPC of 0.68 rel. units and profile thickness 0.073 m, for blind TSBE. For *DF* value 0.6%, with SRRPC 0.68, CRGI is:

$$I_{\mathrm{GL.R}} = 1.1/0.68 \cdot (-1.718 \cdot 0.6^2 + 21.67 \cdot 0.6 + 0.39) = 20.66\%. \quad (16)$$

Based on the obtained *DF* value at RP, the minimum glazing area value, is determined by Eq. (4), and is:

$$S_{\mathrm{GL}} = 20.66 \cdot 15 \cdot \sqrt[2.5]{3/(2 \cdot 2.5)}/100, m^2. \quad (17)$$

Since, according to [31,48], for rooms of various sizes, the dependence of *DF* value on the various sizes TSBE proportions is not synchronous, for each specific case it is necessary to choose the best option for the proportions of TSBE. Therefore, to simplify

2383-8701/© 2020 The Author(s). Published by solarlits.com. This is an open access article under the CC BY license (https://creativecommons.org/licenses/by/4.0/).

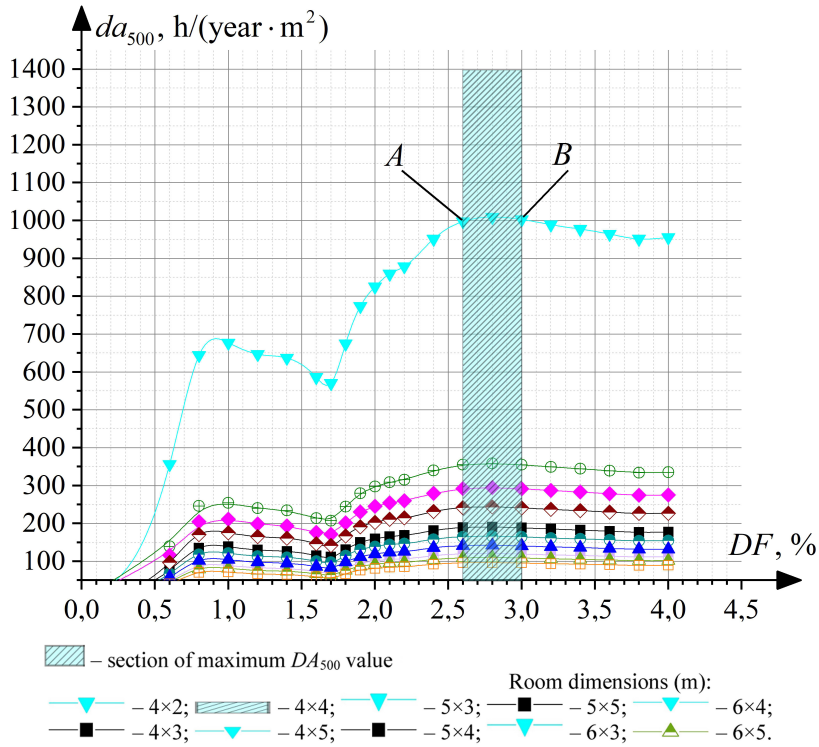

Fig. 8. The dependence of the specific DA_{500} on the *DF* value, for rooms of various sizes, with a prescribed by regulations illumination value of 500 lx, located in the Ternopil city.

the calculations, the TSBE coordination index was taken as 1 ($i_{C.TSBE} = 1$).

To obtain a *DF* value equal 0.6% with SRRPC equal 0.68, with $i_{C.TSBE} = 1$, in accordance with Eq. (5) and Eq. (6), the TSBE glazing ought to have the following dimensions: $h_{GL} = 1.59$ m, $l_{GL} = 1.59$ m.

To determine TSBE area, it is necessary to determine TSBE profile and foam filling width. According to [47], the profile width for the blind TSBE (see Fig. 2) is 0.073 m.

Based on the size of the glazing and the thickness of the profile according to Eq. (7) and Eq. (8), TSBE height and width have the following dimensions: $h_{TSBE} = 1.736$ m, $l_{TSBE} = 1.736$ m.
With TSBE width 1.736 m, according to Eq. (9), the foam filling width is:

$$l_{F.F} = (125 \cdot 1.736^2 - 123 \cdot 1.736 + 1050) \cdot 10^{-5} = 0.012\ m. \quad (18)$$

The TSBE opaque part width, according to Eq. (11), is:

$$l = 0.073 + 0.012 = 0.085\ m. \quad (19)$$

To ensure *DF* value of 0.6%, according to Eq. (10), the TSBE area should be:

$$S_{TSBE} = 2.53 + 2 \cdot 0.085 \cdot (1.59 + 1.59 + 2 \cdot 0.085) = 3.097\ m^2. \quad (20)$$

To determine the TSBE area at which *DF* value will be ensured, in which the maximum TSBE efficiency is achieved, it is necessary to calculate the area of rooms with various sizes. To do this, we carry out the above calculations for rooms with dimensions (w × d): 4×2 m, 4×3 m, 4×4 m, 4×5 m, 5×3 m, 5×4 m, 5×5 m, 6×3 m, 6×4 m and 6×5 m. The calculation results are given in Table 6.

The specific daylight autonomy is determined by Eq. (21)

$$da = DA/S_{TSBE}, \text{h/(year·m}^2). \quad (21)$$

As a result of the calculation, data were obtained regarding the efficiency of TSBE area use for the Ternopil city, which are presented in Fig. 7.

As can be seen from Fig. 7, the maximum specific DA_{300} for providing daylighting, with a prescribed by regulations illumination of 300 lx (from 1342.82 h/(year·m²) to 1351.52 h/(year·m²)) is observed with the *DF* value of 1.7% (Fig. 7, p. *A*) up to 1.9% (Fig. 7, p. *B*), maxima – at 1.8%.

According to Fig. 8 at the illumination of 500 lx, the maximum specific DA_{500} (from 997.71 h/(year·m²)) to 1009.35 h/(year·m²)) is observed at *DF* value of 2.6% (Fig. 8, p. *A*) up to 3.0% (Fig. 8, p. *B*), maxima – at 2.8%.

4. Discussion

This research is dedicated to the determination of the analytical dependences of daylight autonomy on *DF* value and the TSBE area in rooms of various sizes. The feasibility of the study is due to the need to reduce the energy consumption in office buildings. It can be achieved by ensuring maximum specific efficiency of TSBE usage.

In studies [3,12,16,18,19,29,29,39,40,49-56], the results of TSBE energy efficiency, using WWR and WFR to determine the parameters of its maximum energy efficiency were presented. Articles [18,19] present the results of modeling energy expenditures for 108 cases. There is also presented the energy efficiency indicator EDR. However, these results were obtained using computer simulation for specific cases, which makes their widespread use impossible. In order to be able to present the

2383-8701/© 2020 The Author(s). Published by solarlits.com. This is an open access article under the CC BY license (https://creativecommons.org/licenses/by/4.0/).

results of this study in the form of analytical expressions, there was a need to study the dependence of the energy efficiency of daylighting (which is expressed in its autonomy). Therefore, in the framework of this study, a research was conducted on the dependence of DA_{300} and DA_{500} on the *DF* value for several cities.

It is proved that the efficiency of using the TSBE area to provide daylight illumination of 300 lx in an office building is maxima with a DF value of 1.8%. For 500 lx – with 2.8% DF value. It was found that to assess the TSBE effectiveness for rooms lighting, it is advisable to use the composite room glazing index (CRGI). When using the window to floor ratio (WFR) or window to wall ratio (WWR), changing the size of the rooms leads to a significant increase in the calculation error, – 3.24 times for WFR and 8.15 times for WWR. At the same time, when using the CRGI, the error does not exceed 26.1%, but it also has certain limitations. If the room width is double the depth ($l_R \geq 2 \cdot d_R$), the error can increase up to 68%.

It should be noted that, depending on the location of the investigated object, the values of the maximum specific daylight autonomy may differ from those presented in this study. This is due to the changing climatic condition during the year, in addition to changing the trajectory of the incidence of sunlight, cloudiness also changes quite dynamically. Therefore, such calculations must be carried out separately for each specific case.

Since the daylight autonomy takes into account the level of illumination above the prescribed by regulation values, for a total assessment of the potential for use daylighting, it is necessary to take into account the limiting values of illumination on the working surface at 3000 lx [61]. This is necessary in order to take into account glare and the need to use shading devices. That's why in further studies it is necessary to combine the daylight autonomy with the useful daylight illuminance (UDI) metric [62].

5. Conclusions

The research aimed at establishing the *DF* values, for which maximum efficient use of daylighting was ensured in office rooms. As a result of the research, it was established, that irrespective of the size of the rooms, the maximum specific daylight autonomy (at illumination of 300 lx), with lateral daylight, occurs when the daylight factor is in the range of 1.7% to 1.9%. Maxima – at 1.8%. At illumination of 500 lx, the maximum specific daylight autonomy will occur at a daylight factor range of 2.6% to 3.0%. Maxima – at 2.8%.

When *DF* values are in the range of 0.8% to 1.2% at DA_{300} and 1.2% to 1.7% at DA_{500}, there is a sharp decline in the efficiency of daylight usage. As a result of the approximation of point values, an expression is obtained for determining the daylight autonomy, for a prescribed regulations illumination value of 300 lx, for rooms of various sizes with different TSBE areas.

The parameters of translucent structures of building envelope and *DF* are determined, at which the maximum efficiency of daylight usage in office rooms of various sizes is ensured. Also, it was found, that evaluating the efficiency of daylight usage for rooms of various sizes is impossible to perform using WFR and WWR. It is proved that the using of the composite room glazing index makes it possible to adequately assess the energy efficiency of daylight usage in rooms of various sizes, except when $l_R \geq 2 \cdot d_R$. In practice, the results of this study can be used in the design of premises by ensuring maximum efficiency of daylight usage and saving energy by reducing the duration of the artificial lighting consumption. Another area where the results can be applied is the development of regulatory documents for each region, by determining the maximum specific daylight autonomy for them. It help will reduce the total energy consumption and increase the total energy efficiency of office buildings.

Acknowledgement

This paper is based on the thesis from Burmaka and Tarasenko [63].

Contributions

The authors have contributed equally.

Declaration of competing interest

The authors report no conflicts of interest. The authors alone are responsible for the content and writing of this article.

References

[1] S. M. Gvozdev, D. I. Panfilov, T. K. Romanova, L. P. Varfolomeev, Energy efficient electric lighting, Moscow: Izdatelskij dom MEI, 2013, Available: https://issuu.com/undprussia/docs/ee_lighting_textbook.

[2] M. Boubekri, Daylighting design. Planning strategies and best practice solutions, Basel: Birkhäuser, 2014. Available: https://issuu.com/birkhauser.ch/docs/daylighting_design._planning_strate.

[3] S. Samoilov, A. Solov'jov, Office light design and energy saving, Light & Engineering 1 (2000) 23-25.

[4] C. Bartenbach, V. Bartenbach, How to illuminate the workplace in the office, Modern Lighting 1 (2010) pages 70-72. Available online: https://www.terraelectronica.ru/pdf/show?pdf_file=%252Fimages%252Fnotes%252FSS2010_1_5.pdf (accessed on 5 May 2020).

[5] Y. Koso, Solar House, Daylighting in planning and building, Moscow, Kontent, 2008.

[6] Yu. Tabunshchykov, Windows: unexplored opportunities. Window as an element of architecture, heat and sun protection systems, heating and ventilation, as well as bioarchitecture, Stroiprofil 30(8) (2003). Available online: http://stroyprofile.com/archive/1037 (accessed on 5 May 2020).

[7] E. Neufert, Bauentwurfslehre. 42th ed. Abbildungen: Buch inkl, Online-Nutzung; 2018.

[8] E. Korkina, Comprehensive Comparison of Window Blocks for Lighting and Thermotechnical Parameters, Zhilishchnoe Stroitel`stvo 6 (2015) 60-62, Available online: http://rifsm.ru/u/f/js_06_fin.pdf.

[9] T. G. Korzhneva, V. Ya. Ushakov, A. T. Ovcharov, Analysis of room heat loss through daylighting systems, Izvestiya Tomskogo politekhnicheskogo universiteta 322 (2013) 56-60. Available online: https://cyberleninka.ru/article/v/analiz-teplopoter-pomescheniy-cherez-sistemy-estestvennogo-osvescheniya (accessed on 5 May 2020).

[10] H. Altan, J. Mohelnikova, Windows influence on room daylighting in residential buildings, Journal of Civil Engineering and Architecture 9 (2015) 291-299.

[11] L. Bellia, F. Fragliasso, A. Pedace, Evaluation of Daylight Availability for Energy Savings, Journal of Daylighting 2 (2015) 12-20.

[12] L. Doulos, A. Tsangrassoulis, and F. V. Topalis, A critical review of simulation techniques for daylight responsive systems, in: Proceedings of the European Conference on Dynamic Analysis, Simulation and Testing applied to the Energy and Environmental performance of buildings, 2005, Athens, Greece.

[13] A. Choi, K. Song, and Y. Kim, The characteristics of photosensors and electronic dimming ballasts in daylight responsive dimming systems, Building and Environment 40 (2005) 39-50.

[14] L. Doulos, A. Tsangrassoulis, and F.V. Topalis, The role of spectral response of photosensors in daylight responsive systems, Energy and Buildings 40 (2008) 588-599.

[15] L. Doulos, A. Tsangrassoulis, and F. Topalis, Quantifying energy savings in daylight responsive systems: The role of dimming electronic ballasts, Energy and Buildings 40 (2008) 36-50.

2383-8701/© 2020 The Author(s). Published by solarlits.com. This is an open access article under the CC BY license (https://creativecommons.org/licenses/by/4.0/).

[16] C. Ehrlich and K. Papamichael, J. Lai, K. Revzan, A method for simulating the performance of photosensor-based lighting controls, Energy and Buildings 34 (2002) 883-889.
[17] B. Paule, J. Boutillier, S. Pantet, Y. Sutter, A lighting simulation tool for the new European daylighting standard, in: Proceedings of BSO 2018: 4th Building Simulation and Optimization Conference, Cambridge, UK, 2018, pp. 32-37.
[18] P. Xue, J. Xie, J. Liu, C. Mak, How to choose a better envelope design? A balance between energy and daylighting performance, 10th International Symposium on Heating, Ventilation and Air Conditioning, ISHVAC2017, 19-22 October 2017, Jinan, China. Procedia Engineering 205 (2017) 1027-1033.
[19] J. C. Xie, P. Xue, C. M. Mak, J. P. Liu, Balancing energy and daylighting performances for envelope design: A new index and proposition of a case study in Hong Kong, Applied Energy 205 (2017) 13-22.
[20] V. Koval, A. Fedus, Avtomatyzatsiia vymiriuvan rivnia osvitlenosti vid svitylnykiv mistsevoho osvitlennia, Collection of abstracts XIV Conference Ternopil National Technical University Ivan Pul'uj "Materials Science and Engineering" (Tern., 27-28 October 2010), 2 (2010) 62. Available online: http://elartu.tntu.edu.ua/handle/123456789/12102 (accessed on 5 May 2020).
[21] O. Hereha, V. Koval, Energy efficiency of lighting on administrative offices, Materials of the III All-Ukrainian Scientific and Technical Conference "Theoretical and Applied Aspects of Radio Engineering and Instrumentation" (Tern., 8-9 June 2017), (2017) 201. Available online: http://elartu.tntu.edu.ua/handle/lib/24238 (accessed on 5 May 2020).
[22] V. Koval, Energy efficiency combined lighting, Materials of the III All-Ukrainian Scientific and Technical Conference "Theoretical and Applied Aspects of Radio Engineering and Instrumentation" (Tern., 8-9 June 2017), (2017) 211-212. Available online: http://elartu.tntu.edu.ua/handle/lib/24244 (accessed on 5 May 2020).
[23] O. V. Serheichuk, Features of accounting for adjustable sun protection in the calculation of solar heat, Budivelni konstruktsii, 80 (2014) 17-21. Available online: http://nbuv.gov.ua/UJRN/buko_2014_80_6 (accessed on 5 May 2020).
[24] M. Tian, Yu. Su, An Improvement to Calculation of Lighting Energy Requirement in the European Standard EN 15193:2007, Journal of Daylighting 1 (2014) 16-28.
[25] T. Dogan, Y. C. Park, A new framework for residential daylight performance evaluation. In: Proceedings of the International IBPSA Building Simulation Conference, San Francisco, USA, 2017, pp. 170-178.
[26] T. Dogan, Y. C. Park, A critical review of daylighting metrics for residential architecture and a new metric for cold and temperate climates, Lighting Research & Technology 51 (2018) 206-230.
[27] A. K. Solov'jov, I. Sun', Influence of light transmission characteristics on the energy consumption of an office building in a climate zone with hot summers and cold winters in China, Vestnik MGSU, 9 (2012) 31-38. Available online: https://cyberleninka.ru/article/v/vliyaniya-harakteristik-svetoproema-na-energopotreblenie-ofisnogo-zdaniya-v-klimaticheskoy-zone-s-zharkim-letom-i-holodnoy-zimoy-v-kitae-1 (accessed on 5 May 2020).
[28] J. Lee, M. Boubekri, F. Liang, Impact of building design parameters on daylighting metrics using an analysis, prediction, and optimization approach based on statistical learning technique, Sustainability 11 (2019) 1474.
[29] M-C. Dubois, A. Blomsterberg, Energy saving potential and strategies for electric lighting in future North European, low energy office buildings: A literature review, Energy and Buildings 10 (2011) 2572-2582.
[30] M-C. Dubois, F. Bisegna, N. Gentile, M. Knoop, B. Matusiak, W. Osterhaus and E. Tetri, Retrofitting the Electric Lighting and Daylighting Systems to Reduce Energy Use in Buildings: A Literature Review, Energy Research Journal 1 (2015) 25-41.
[31] V. Burmaka, M. Tarasenko, K. Kozak, V. Khomyshyn, Definition of a composite index of glazing rooms, Eastern-European journal of enterprise technologies 10 (2018) 22-28.
[32] DBN V.2.5-28-2018 – Engineering equipment of buildings and structures. Daylighting and artificial lighting. Available online: https://dbn.co.ua/load/normativy/dbn/dbn_v_2_5_28/1-1-0-1188 (accessed on 5 May 2020).
[33] DIN EN 12464-1:2011-08 – Light and lighting - Lighting of work places – Part 1: Indoor work places.
[34] DSTU B V.2.6-23:2009 – Constructions of houses and buildings. Window and door blocks. General technical conditions. Available online: https://dbn.co.ua/load/normativy/dstu/5-1-0-1077 (accessed on 5 May 2020).
[35] ISO 21930 – Sustainability in buildings and civil engineering works – Core rules for environmental product declarations of construction products and services. Available online: https://www.iso.org/standard/61694.html (accessed on 5 May 2020).
[36] DBN V.2.6-31:2016 – Thermal buildings insulation. Available online: https://dbn.co.ua/load/normativy/dbn/1-1-0-13 (accessed on 5 May 2020).
[37] Thermal insulation of buildings. Including energy efficiency of buildings: ISO 91.120.10. – ISO. Available online: https://www.iso.org/ru/ics/91.120.10/x/ (accessed on 5 May 2020).
[38] CIE Technical Report Daylight, CIE, Vienna, 1970.
[39] C. F. Reinhart and O. Walkenhorst, Validation of dynamic RADIANCE-based daylight simulations for a test office with external blinds, Energy and Buildings 33 (2001) 683-697.
[40] Z. Rogers, Daylighting Metric Development Using Daylight Autonomy Calculations In the Sensor Placement Optimization Tool, 2006, Available: http://www.archenergy.com/SPOT/download.html.
[41] ReluxDesktop – the new approach to planning –RELUX, (n.d.). Available online: https://relux.com/en/relux-desktop.html (accessed on 5 May 2020).
[42] P. Byrne, Comparison Study of Four Popular Lighting Simulation Software Programs. Brunel University; 2014 Available online: https://issuu.com/peter.byrne1000/docs/dissertation_-_peter_byrne_-_publis/ (accessed on 5 May 2020).
[43] L. Gabrova, M. Hlaskova, F. Vajkay, Comparative Evaluation of Daylighting Simulation Programs, Applied Mechanics and Materials 824 (2016) 732–739.
[44] I. Anne, R. Nicolas, H. Mette, J. Michael, C. Jens, O. Werner, J. Kjeld, Daylight Calculations in Practice:An Investigation of the Ability of Nine Daylight Simulation Programs to Calculate the Daylight Factor in Five Typical Rooms; Danish Building Research Institute, Aalborg University: Aalborg, Denmark (2013) 26.
[45] DIN EN 17037 – Daylight in buildings. Available online: https://www.en-standard.eu/din-en-17037-daylight-in-buildings/ (accessed on 5 May 2020).
[46] M. Tarasenko, V. Burmaka, K. Kozak, Dependences of relative and absolute glazed area from configuration and common areas of window embrasure, Scientific Journal of TNTU (Tern.), 89(1) (2018) 122-131.
[47] Profile Softline 82 – veka.ua, (n.d.). Available online: http://veka.ua/ua/products/win/SOFTLINE_82.html (accessed on 5 May 2020).
[48] V. Burmaka, M. Tarasenko, Research of the impact of geometric parameters of window egress on the coefficient of natural illumination, Materials of the International scientific and technical conference "Fundamental and applied problems of modern technologies" to the 100th anniversary of the foundation of the National Academy of Sciences of Ukraine and to the commemoration of Ivan Puluj (100th anniversary from the day of death) (Tern., 22-24 May 2018), (2018) 247-248, Ukraine. Available online: http://elartu.tntu.edu.ua/handle/lib/25411 (accessed on 5 May 2020).
[49] A. Nedhal, F. S. F. Syed, A. Adel, Relationship between window-to-floor area ratio and single-point daylight factor in varied residential rooms in Malaysia, Indian journal of science and technology 9(33) (2016) 1-8.
[50] M. F. M. A. Sadin, N. L. N. Ibrahim, K. Sopian, E. Salleh, Daylighting rules of thumb and a comparison of different floor depth under overcast and intermediate sky without sun, Proceedings of the 2014 International Conference on Power Systems, Energy, Environment (2014) 173-177. Available online: https://pdfs.semanticscholar.org/6900/fad9b4b2f856151fa1af17790aa4d4ae8c0d.pdf (accessed on 5 May 2020).
[51] M. S. Firas, Daylighting: an alternative approach to lighting buildings, Journal of American Science 10 (4) (2014) 1-5. Available: http://www.jofamericanscience.org/journals/am-sci/am1004/.
[52] Z. Noureddine, Z. Djamel, The impact of window configuration on the overall building energy consumption under specific climate conditions, International conference – alternative and renewable energy quest, areq 2017, February, 2017, pp. 162-172.
[53] İ. Tuğba, An investigation on daylighting performance in educational institutions, Structural Survey 31 (2013) 121-138.
[54] P. Rathi, Optimization of energy efficient windows in office buildings for different climate zones of the United States, Kent State University, 2012, Available online: https://etd.ohiolink.edu/pg_10 (accessed on 5 May 2020).
[55] R. M. J. Bokel, The effect of window position and window size on the energy demand for heating, cooling and electric lighting, Proceedings: Building Simulation, 2007, pp. 117-121.
[56] H. Shen, A. Tzempelikos, A parametric analysis for the impact of facade design options on the daylighting performance of office spaces, 1st International High Performance Buildings conference, Paper 36, 2010.

2383-8701/© 2020 The Author(s). Published by solarlits.com. This is an open access article under the CC BY license (https://creativecommons.org/licenses/by/4.0/).

[57] P. Zazzini, A. Romano, A. Di Lorenzo, V. Portaluri, A. Di Crescenzo, Experimental Analysis of the Performance of Light Shelves in Different Geometrical Configurations Through the Scale Model Approach, Journal of Daylighting 7 (2020) 37-56.

[58] D. N. Makarov, Computer simulation methods for lighting installations, Doctoral dissertation, Moscow Power Engineering Institute 2007. Available online: http://lightonline.ru/documents/Other/Dissertation_MakarovDN.html (accessed on 5 May 2020).

[59] Xu Yu, Yuehong Su, Xin Chen, Application of RELUX simulation to investigate energy saving potential from daylighting in a new educational building in UK, Energy and Buildings 74 (2014) 191-202.

[60] V. Burmaka, M. Tarasenko, K. Kozak, V. Khomyshyn, Impact of the translucent structures of exterior wall envelope orientation on the energy balance of the premises, Scientific Journal of TNTU 94 (2019) 111-122.

[61] J. Mardaljevic, M. Andersen, N. Roy, J. Christoffersen, Daylighting metrics: is there a relation between useful daylight illuminance and daylight glare probability, Proceedings of the building simulation and optimization conference (BSO12), Loughborough, UK, 2012, 189-196.

[62] A. Nabil, J. Mardaljevic, Useful daylight illuminance: a new paradigm for assessing daylight in buildings, Lighting Research & Technology 37 (2005) 41–57.

[63] V. Burmaka, M. Tarasenko, Efficiency of using of daylight in office rooms, Materialy XXI naukovoi konferentsii TNTU im. I. Puliuia, 2019, pp. 115-116, Ukraine, Available online: http://elartu.tntu.edu.ua/handle/lib/28176 (accessed on 5 May 2020).

2383-8701/© 2020 The Author(s). Published by solarlits.com. This is an open access article under the CC BY license (https://creativecommons.org/licenses/by/4.0/).